Lucande

10051012

Product Specifications:

2x E12 MAX. 40W TYPE C INCADESCENT LAMP OR MAX. 10W SBLED LAMP (per bulb holder)
Voltage: 120VAC Frequency: 60Hz
1 wall lamp
Suitable for Dry Locations

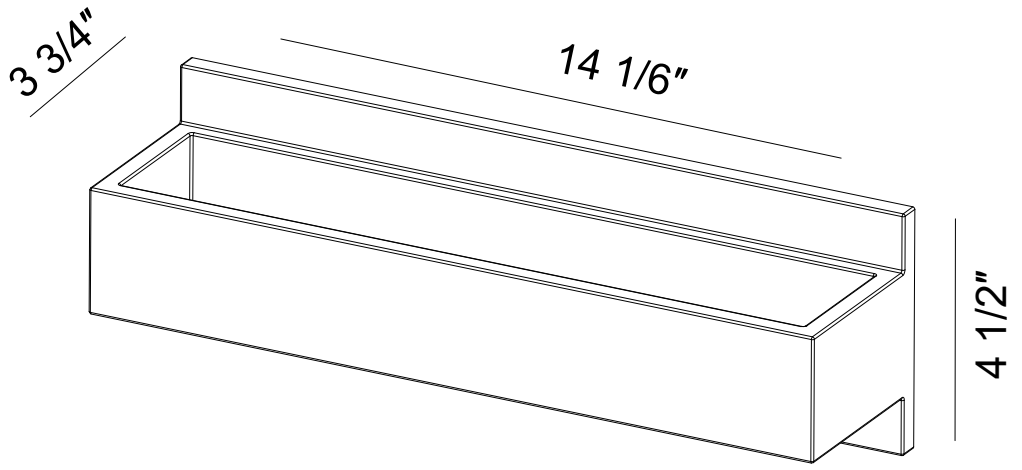

Unit of measure: **inch**

LUQOM Inc. 511 N Boardwalk
1st Floor Rehoboth Beach
Delaware 19971 United States of America
support@houseoflamps.com

Intended use

Provided for fixed indoor use on walls

Package contents

1 Lamp
Installation hardware
Mounting instructions
Bulbs not included

Warranty

LIMITED WARRANTY

This product is warranted to be free from defects in workmanship and materials for up to 1 year from date of purchase. If it fails to do so, please visit www.Lucande.com

Lucande

Safety Information

For your safety, always remember to:

- Turn off the power supply at the fuse or circuit breaker box before you install the fixture.
- Ground the fixture to avoid potential electric shocks and to ensure reliable starting.
- Double-check all connections to be sure they are tight and correct.
- Wear rubber soled shoes and work on a sturdy wooden ladder.
- Account for small parts and destroy packing material, as these may be hazardous to children.
- THIS PRODUCT MUST BE INSTALLED IN ACCORDANCE WITH THE APPLICABLE INSTALLATION CODE BY A PERSON FAMILIAR WITH THE CONSTRUCTION AND OPERATION OF THE PRODUCT AND THE HAZARDS INVOLVED.

This fixture is designed for use in a circuit protected by a fuse or circuit breaker. It is also designed to be installed in accordance with local electrical codes. If you are unsure about your wiring, consult a qualified electrician or local electrical inspector, and check your local electrical code.

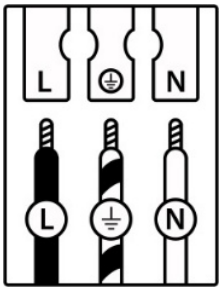

	Wire	Color
L	Line (Hot/Live wire)	Black
⏚	Earth conductor (ground)	Green or bare chopper
N	Neutral	white

Caution: Turn off the main power at the circuit breaker before installing the fixture, in order to prevent possible shock.

Caution: Consult a certified Electrician to ensure correct branch circuit conductor

Caution: RISK OF FIRE. Before installing your lighting fixture, thoroughly review this installation manual. If you do not have sufficient electrical wiring experience have your fixture installed by a certified electrician. All electrical connections must be in accordance with Local and National Electrical Code (NEC) Standards. Reliable operating temperature is -25°C to 45°C.

WARNING: RISK OF SHOCK. House electric current can cause painful shock or serious injury unless handled properly.

NOTICE: All connections must be in accordance with local electrical standards and the National Electrical Code (N.E.C.). Remove the fixture and the mounting package from the box and make sure that no parts are missing by referencing the illustrations on the installation instructions.

Lucande

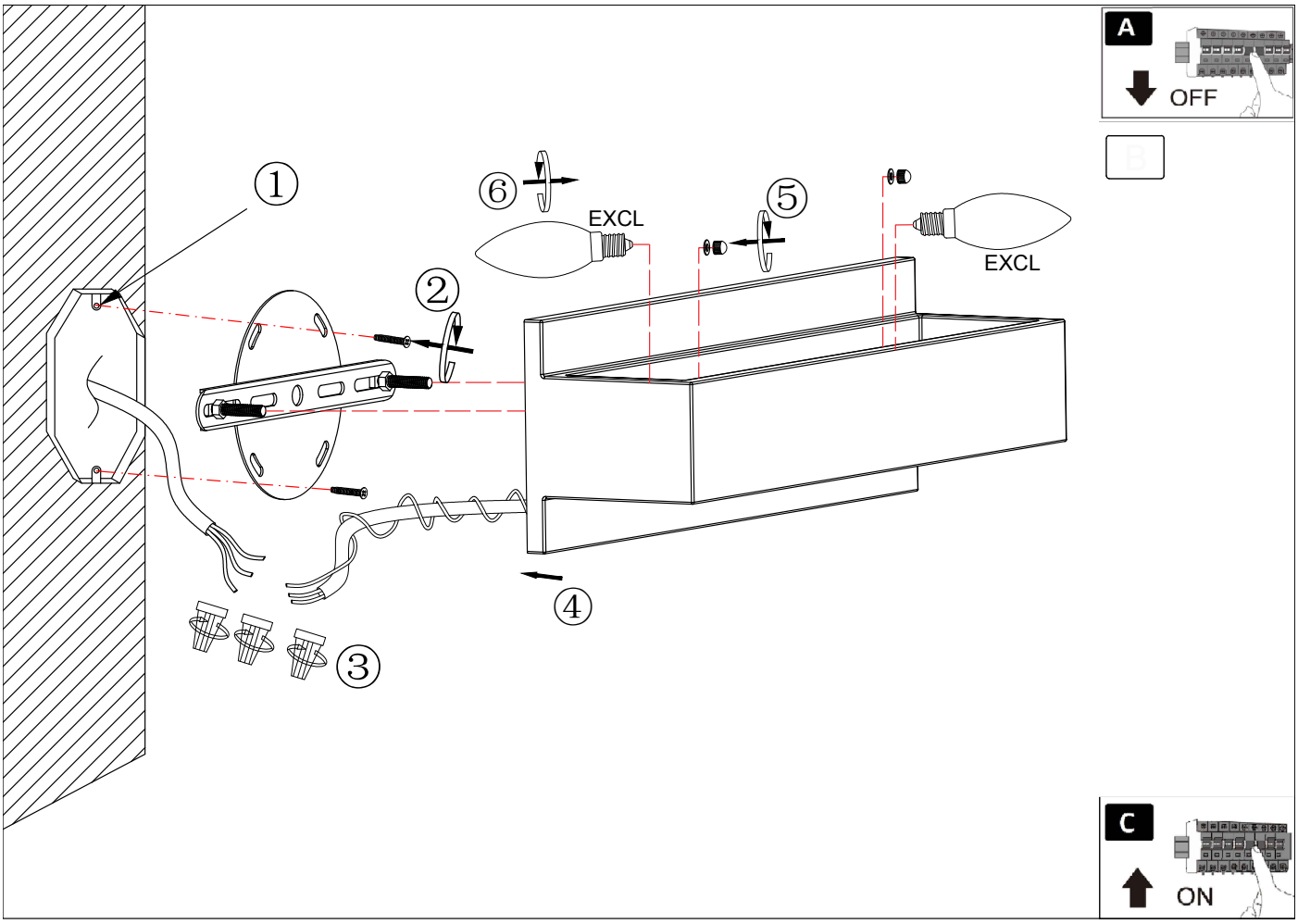

Lucande

LUQOM Inc. Limited Warranty

For a period of 1 year from the date of purchase, LUQOM, Inc. warrants this Product will be free from defects in material or workmanship subject to the limitations contained within this Limited Warranty.

This Limited Warranty excludes and does not cover:

- Damage or defects caused by or resulting from normal wear and tear or otherwise due to the normal use and aging of the Product, including cosmetic damage, scratches and/or dents, minor imperfections or discoloration resulting from age or exposure to environmental or external factors such as sunlight, fumes, corrosive substances and/or excessive moisture;
- Damage caused by or resulting from improper voltage, improper power supply, surges in electric current, power interruption or power outages;
- Damage caused by or resulting from improper grounding, faulty installation or failure to follow applicable electrical codes;
- Damage caused by or resulting from accident, abuse, misuse, neglect, alteration, modification, tampering, and/or abnormal use;
- Damage caused by or resulting from an act of God, fire, earthquake, lightning strikes, or other external cause; and,
- Replacement of consumable items such as bulbs.

DISCLAIMER OF IMPLIED WARRANTIES, EXCLUSIVE REMEDY AND LIMITATION OF DAMAGES: THIS LIMITED WARRANTY AND THE REMEDIES SET FORTH HEREIN ARE YOUR EXCLUSIVE REMEDY FOR BREACH OF WARRANTY AGAINST LUQOM, INC. OTHER THAN THIS LIMITED WARRANTY, LUQOM, INC. MAKES NO ADDITIONAL REPRESENTATIONS OR WARRANTIES, EXPRESS OR IMPLIED, INCLUDING WARRANTIES OF MERCHANTABILITY OR FITNESS FOR A PARTICULAR PURPOSE, AND LUQOM, INC. DISCLAIMS ALL STATUTORY AND IMPLIED WARRANTIES, INCLUDING WITHOUT LIMITATION, WARRANTIES OF MERCHANTABILITY AND FITNESS FOR A PARTICULAR PURPOSE AND WARRANTIES AGAINST HIDDEN OR LATENT DEFECTS TO THE EXTENT PERMITTED BY LAW. TO THE EXTENT SUCH WARRANTIES CANNOT BE DISCLAIMED, AND TO THE EXTENT PERMITTED BY APPLICABLE LAW SUCH IMPLIED WARRANTIES ARE LIMITED TO DURATION OF THE LIMITED WARRANTY PERIOD SPECIFIED ABOVE. YOUR SOLE AND EXCLUSIVE REMEDY IS LIMITED TO REPAIR OR REPLACEMENT OF DEFECTIVE PART(S) OR WORKMANSHIP, AT LUQOM, INC.'S SOLE DISCRETION. IN NO EVENT WILL LUQOM, INC.'S LIABILITY TO REPAIR OR REPLACE ANY PRODUCT COVERED BY THIS LIMITED WARRANTY EXCEED THE ORIGINAL PRICE PAID FOR THE

PRODUCT CLAIMED TO BE DEFECTIVE AND LUQOM, INC.'S TOTAL LIABILITY FOR DAMAGES ARISING FROM OR IN CONNECTION WITH THIS LIMITED WARRANTY SHALL NOT EXCEED THE PRICE PAID FOR THE PRODUCT REGARDLESS OF WHETHER SUCH CLAIM ARISES UNDER STATUTE, LAW, REGULATION, CONTRACT, TORT, STRICT LIABILITY, OR OTHERWISE. IN NO EVENT AND UNDER NO CIRCUMSTANCES SHALL LUQOM, INC. BE LIABLE FOR DIRECT, INDIRECT, INCIDENTAL, SPECIAL, EXEMPLARY OR CONSEQUENTIAL DAMAGES, EXPENSES, LOST PROFITS, LOST SAVINGS, BUSINESS INTERRUPTION, PROPERTY DAMAGE, EMOTIONAL DISTRESS, OR PAIN AND SUFFERING ARISING OUT OF THE USE OR INABILITY TO USE ANY PRODUCT COVERED BY THIS LIMITED WARRANTY, EVEN IF ADVISED OF THE POSSIBILITY OF SUCH DAMAGE. ALL DISCLAIMERS AND LIMITATIONS OF LIABILITY SHALL STILL APPLY EVEN IF THE LIMITED REMEDY OF REPAIR AND/OR REPLACEMENT FAILS OF ITS ESSENTIAL PURPOSE.

WARRANTY CLAIMS, REPAIR AND/OR REPLACEMENT: If the Product fails within the warranty period, please contact Luqom, Inc. by email at support@houseoflamps.com or by mail at

LUQOM Inc.
511 N Boardwalk, 1st Floor
Rehoboth Beach, DE 19971
United States of America

for instructions on how to obtain replacement of the Product or refund of the purchase price. This Limited Warranty gives you specific legal rights, and you may also have other rights which vary from state to state.