Safety instructions

Important! Before commencing installation work disconnect the main cable from the power supply - remove fuse or turn switch to “OFF”!

1. Installation should be carried out in accordance with the local safety regulations.
2. In order to prevent damage, please check walls for cables before drilling holes.
3. Please ensure that all electrical connections (even preassembled lamps) are screwed tightly or are fully inserted as good contact is essential for a long life-span at high currents. Please check for tight connections after changing or adjusting lamps. Screwed connections must be tightened after 20 minutes.
4. Please do not place objects on your system (e.g. for decorative purposes) if they were not delivered with the system.
5. The lamps get very hot when in use. Please allow lamps to cool down before touching.
6. Do not change lamps or spots when switched on.
7. System should not be enlarged with additional lamps.
8. If the external flexible cable or cord of this luminaire is damaged, it shall be exclusively replaced by the manufacturer or his service agent or a similar qualified person in order to avoid a hazard.
9. Use of a dimmer is highly recommended. Dimmer must be compatible with type of bulb.
10. Please note that the surface treatment is sensitive to direct sun exposure, that might change the intensity of the colour tone.
11. The glass used for this lamp is hand-blown. Only 1st. quality has been chosen. Air bubbles and variations in thickness and colour is normal.
12. We reserve the right to make technical alterations.

THIS PRODUCT MUST BE INSTALLED IN ACCORDANCE WITH THE APPLICALBE INSTALLATION CODE BY A PERSON FAMILIAR WITH THE CONTRUCTION AND OPERATION OF THE PRODUCT AND THE HAZARDS INVOLVED.

Please keep these instructions.

Fitting: G9

2022-10-07 US

NUURA

www.nuura.com
info@nuura.com

© 2018 All rights reserved

Intertek

Liila 1 Medium

Assembly Instructions

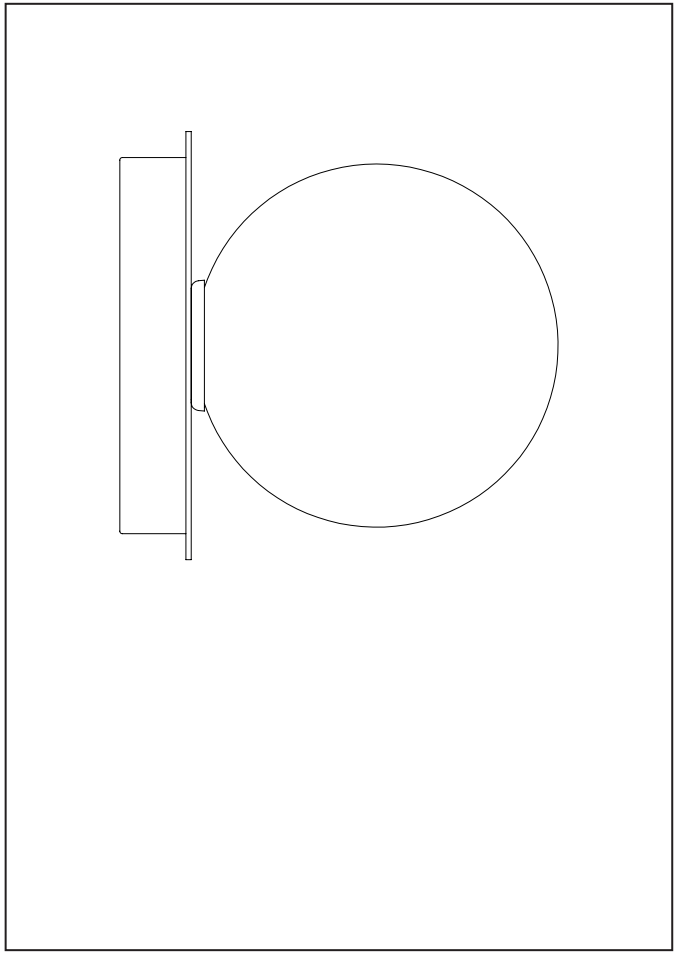

NUURA

© 2018 All rights reserved

1

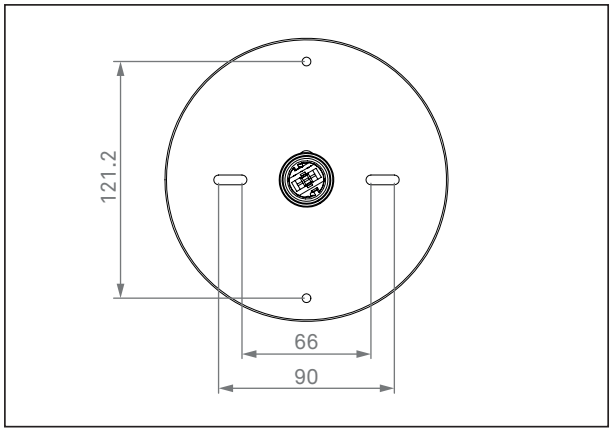

Mounting hole dimensions.

2

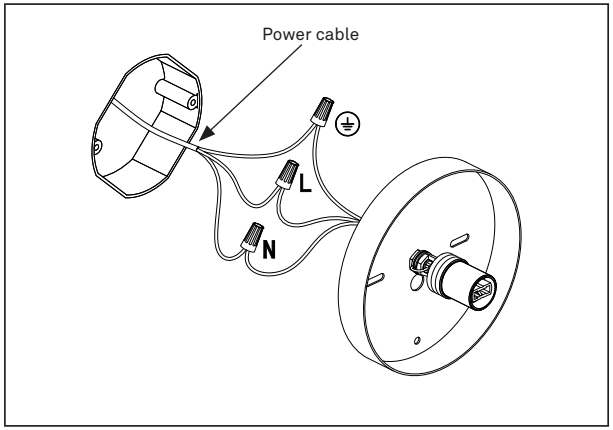

Connect the wire-ends to the power cable with connectors. Match the black wire with “L” the white with “N” and the green/yellow wire with the grounding symbol.

3

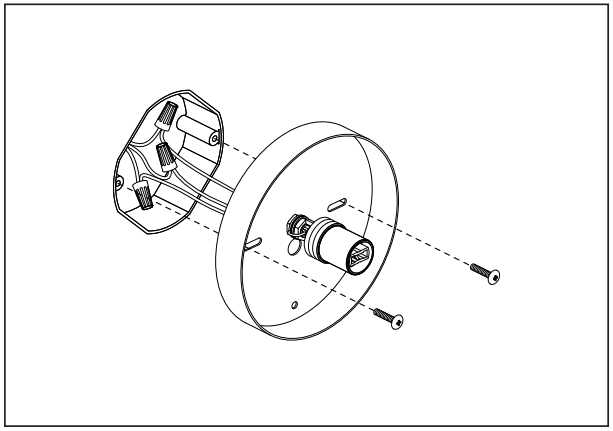

Mount the lamp to the wall or ceiling according to your local standard.

Please make sure the lamp is fixated properly.

4

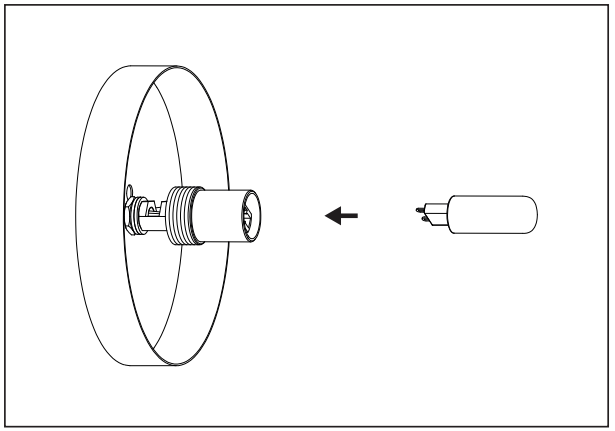

Place a G9 light bulb in the socket. The bulb is NOT included.

5

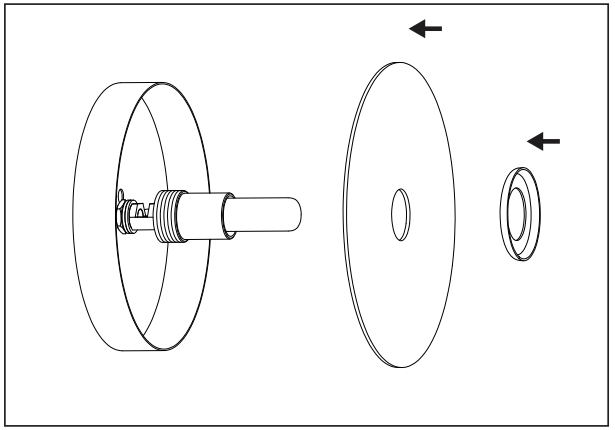

Place the cover plate and ring over the thread.

6

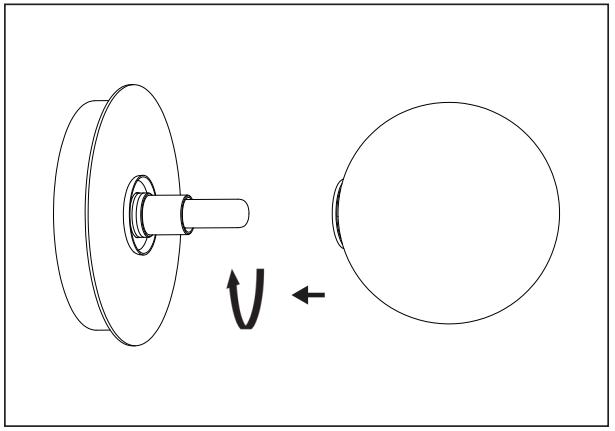

Carefully place the glass globe over the light bulb. Turn clockwise to attach the glass globe.

IMPORTANT: Do NOT over tighten, the glass may fracture.

Completed.